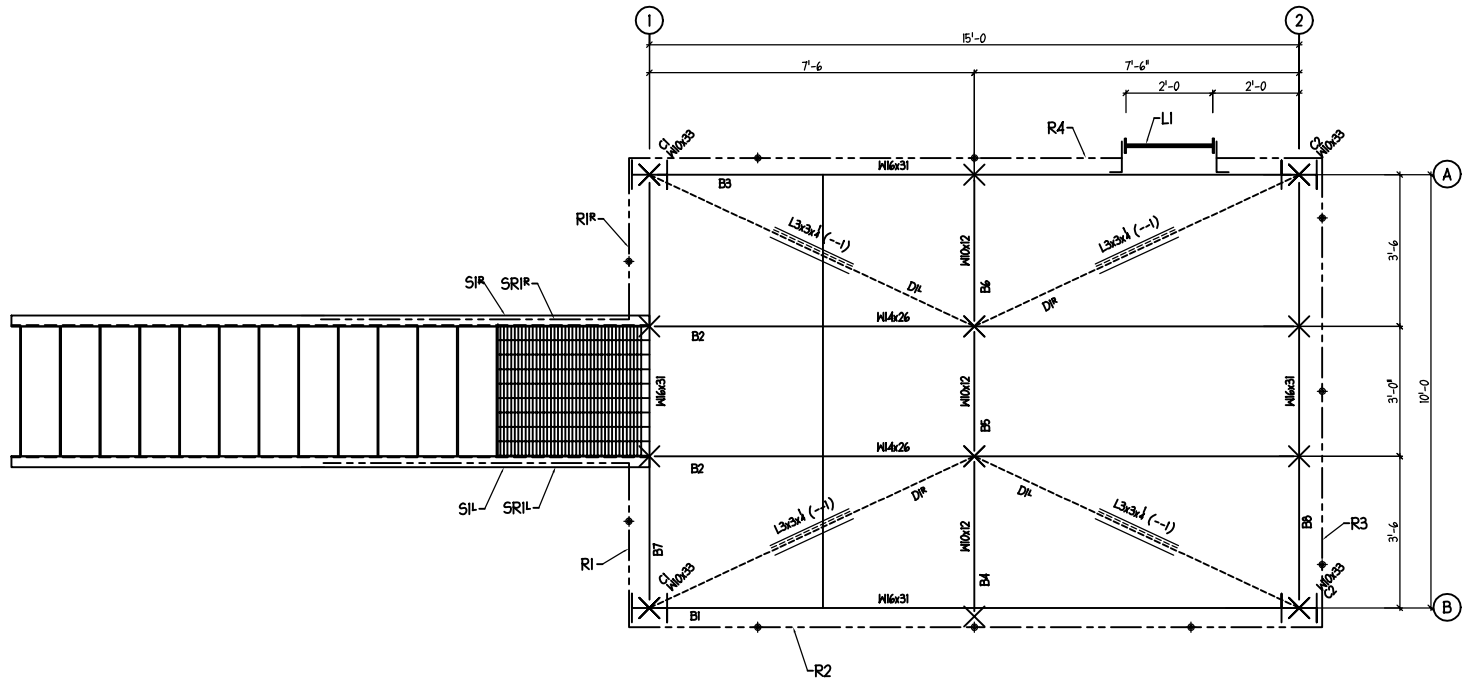

PLATFORM PLAN @ ELEV 8-0

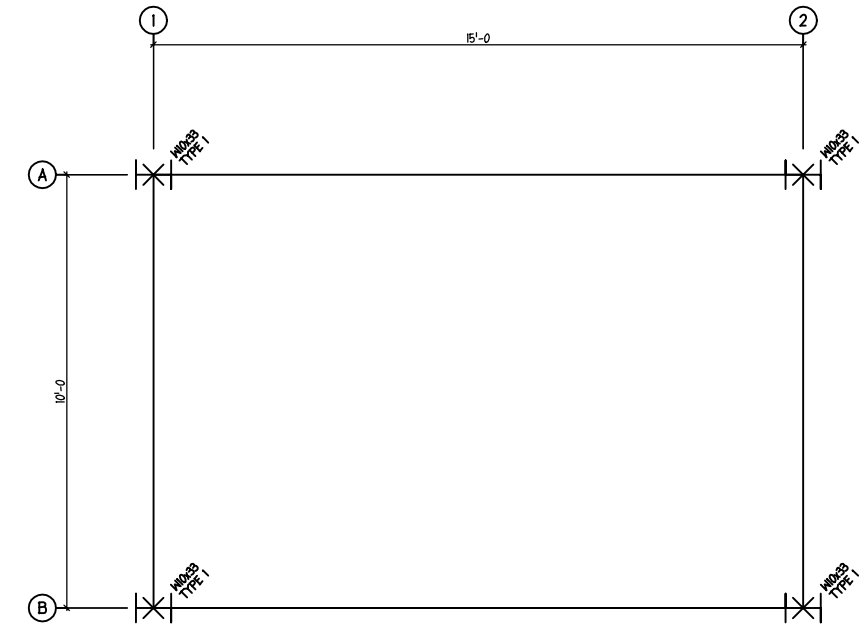

ANCHOR BOLT PLAN

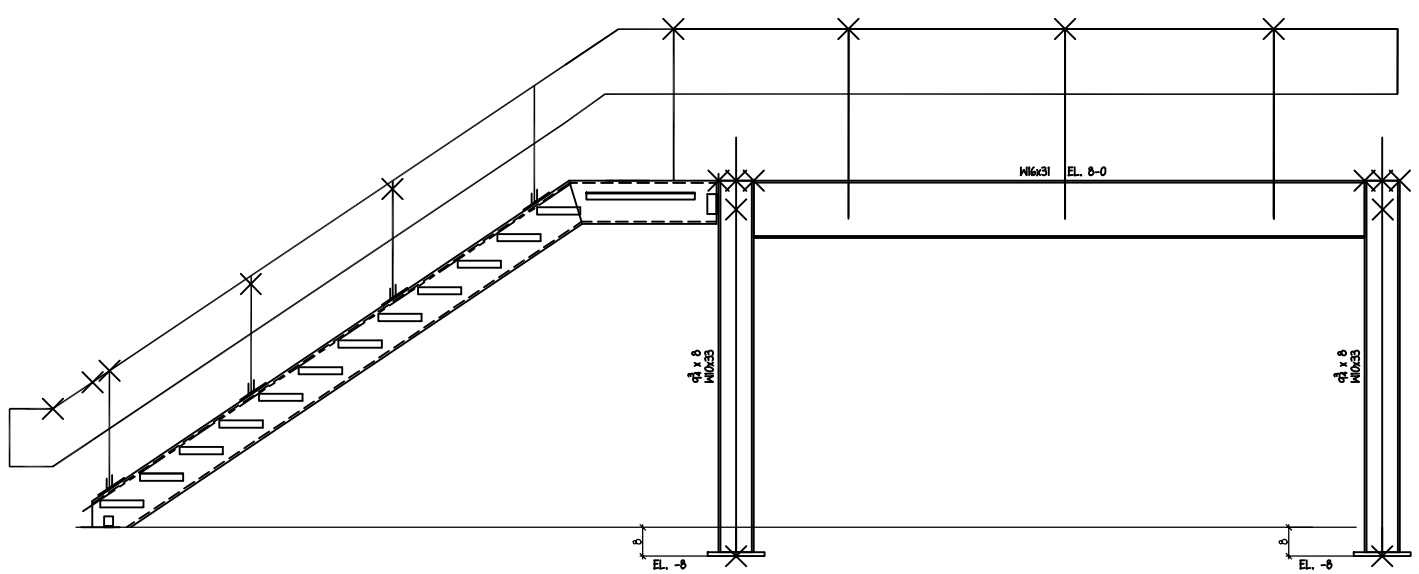

ELEVATION LINE 3

Licensed SSDCP User

PRINTS			
APPROVAL			
SHOP			
FIELD			

PRIMER:	Red Oxide
STEEL:	A36 UNO
HOLES:	13/16
WELDS:	E70xx
AUTOMATICALLY Detailed by SSDCP	

RAMSAY STEEL

CONTRACTOR: Bush Contractors

ENG / ARCH: Michael Jordan, PE

SCALE	REVISIONS	BY	DATE
DATE			
DRWN SP CHKD			
APPV'D			

PROJECT: SSDCP Chemicals
Platform 17G addition

JOB NO. 03-116

DWG. NO. E Sht 1

PDF created with FinePrint pdfFactory trial version http://www.fineprint.com